# RTS R165
# 改對2螃蟹卡鉗座 240mm
## INSTALLING MANUAL FOR B2 CRAB CALIPER ADAPTOR 240MM W/ WASHER FOR RTS R165 安裝說明書

NCY MOTOR SPORTS

- 感謝您購買 NCY 產品，在此向您致上萬分謝意。使用之前, 請您務必詳讀並參照安裝說明，並且正確組裝。
- Before installing, please read Installing Manual well.

## 1-1 配件 *Accessories*

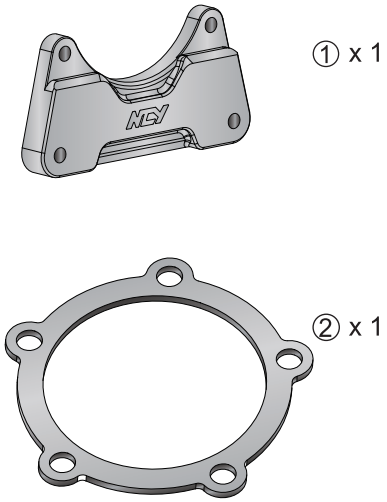


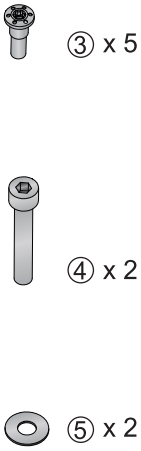


① 螃蟹卡鉗座/
Crab Caliper Adaptor

② 鋁合金墊片3mm/
Aluminum Washer 3mm

③ 加長版碟盤螺絲/
Extended Brake Disk Screw

④ 白鐵內六角螺絲M8x1.25x50L/
Stainless Hex Socket Screw M8x1.25x50L

⑤ 白鐵華司 5/16" 19x1.0t
Stainless Washer 5/16" 19x1.0t

***x1Set***

## 1-2 安裝說明–示意圖 *Installing Manual*

將鋁合金墊片和加長版碟盤螺絲和碟盤鎖附。
Install brake disc and aluminum washer with extended brake disk screws.

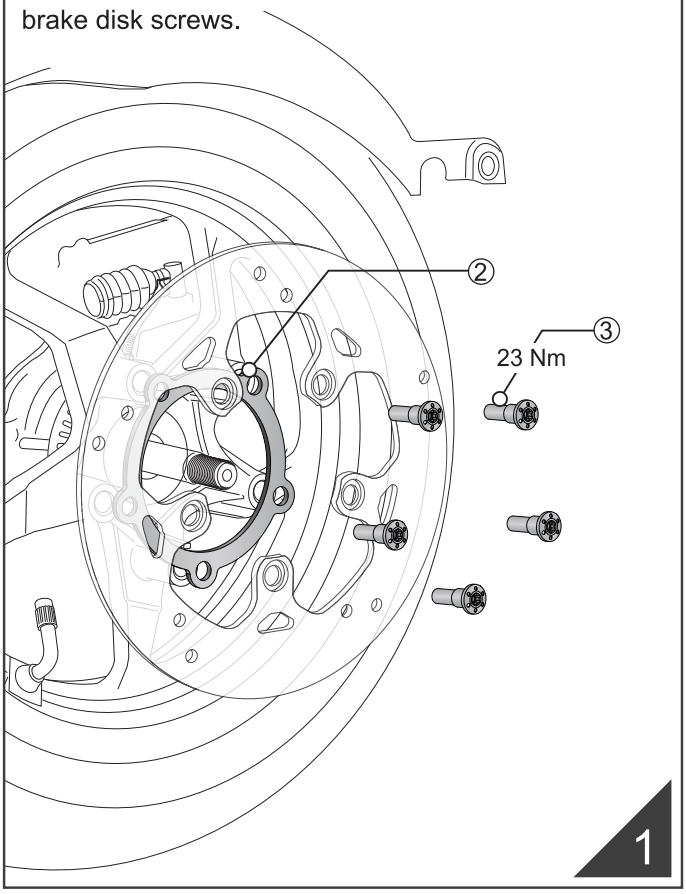

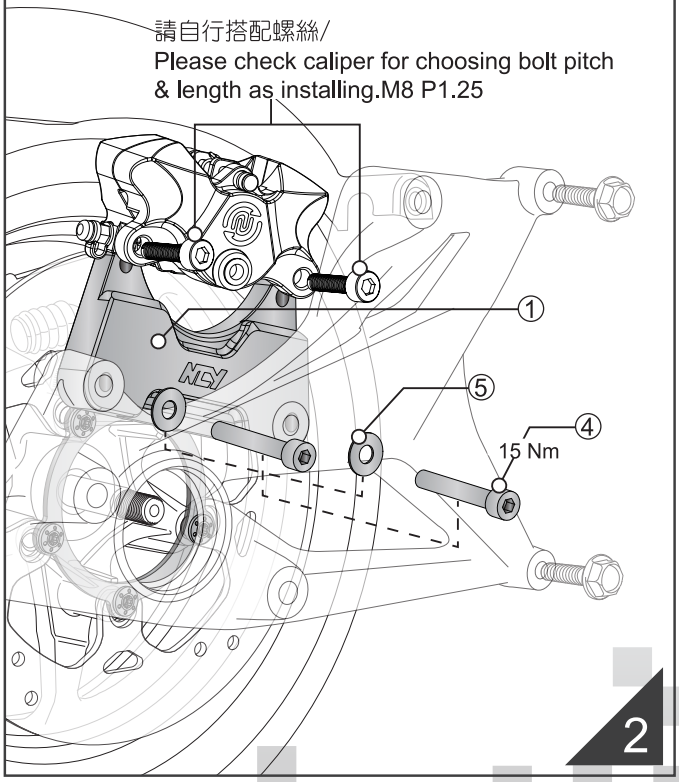
原廠排骨鎖附固定後，白鐵華司/白鐵內六角螺絲，依序鎖附至排骨固定螃蟹卡鉗座，再安裝螃蟹卡鉗。
After original swingarm is in position, install stainless washer and stainless hex socket screw accordingly on crab caliper adaptor, then install crab caliper.